DRAWING REVISION INFORMATION					
ZONE	REV.	CHANGE No.	DESCRIPTION	DATE	APPROVED
	1	N/A	INITIAL RELEASE	23-02-17	



CARBON-20

0.25 LUX LINE @ 2950M
0.50 LUX LINE @ 2086M
1.00 LUX LINE @ 1475M
3.00 LUX LINE @ 851M
MEASURED DATA

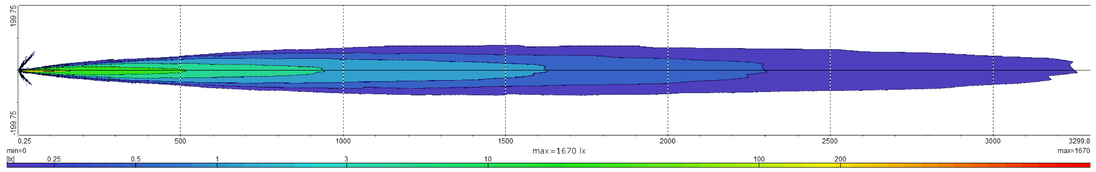



CARBON-20
15 DEGREE REEDED LENSES

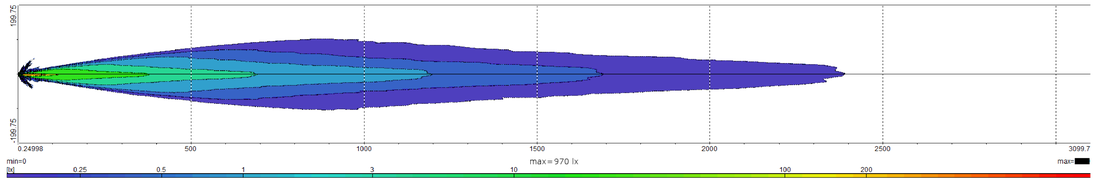



CARBON-20
15 DEGREE REEDED LENSES OUTBOARD, VARIABLE REEDED LENS CENTRE

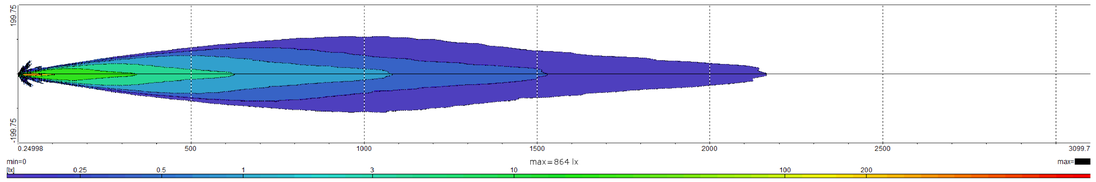

LAZER LAMPS CARBON-20 SERIES

MATERIALS
- CARBON FIBRE HOUSING
- HARDCOATED PC LENS WITH INTERNAL PRINTED BLACKOUT
- ALUMINIUM HEATSINK

WEIGHT
- CARBON 20 LIGHT ASY = 1.375KG

PHOTOMETRIC PERFORMANCE
- 22550 LUMENS
- LED LIFE 50K HRS
- OPTICAL EFFICIENCY 96%
- HIGH INTENSITY LED'S

POWER CONSUMPTION/INFORMATION
- 220W

ELECTRICAL CONNECTOR
- SUPPLIED STANDARD WITH BINDER CONNECTOR
- CUSTOM CONNECTOR OPTIONS CAN BE ENGINEERED AT REQUEST

VOLTAGE REQUIREMENTS
- VOLTAGE RANGE 9-32V

THERMAL CONTROL
- DYNAMIC DRIVE CURRENT MODULATION TO OPTIMISE LIGHT OUTPUT CONSIDERING ENVIRONMENTAL CONDITIONS

PACKAGING REQUIREMENTS
- 2MM AIR GAP ALL ROUND
- THROUGH AIR FLOW REQUIRED (2M/S MIN RECOMMENDED)

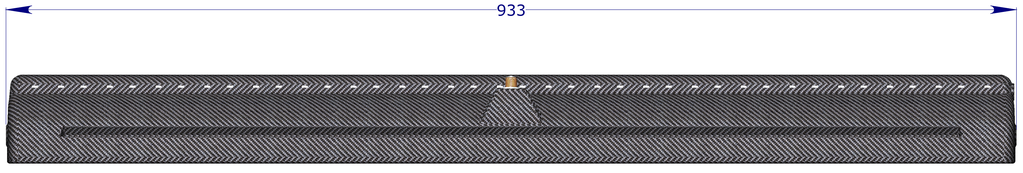

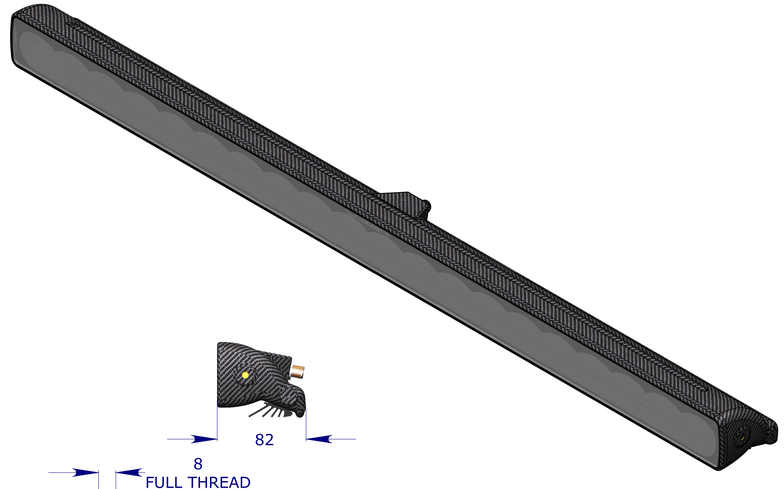

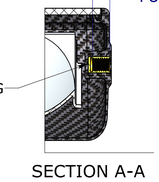

SECTION A-A
SCALE 1 : 1

PRODUCT GROUP:	CARBON SERIES		
PROCESS:			
UNLESS STATED OTHERWISE ALL TOLERANCES TO BE:			
ANGLES	X.X = ±1.0° X.XX = ± 0.5° X.XXX± 0.1°		
DECIMALS	X.X = ±0.4 X.XX = ± 0.2 X.XXX± 0.05		
BREAK ALL SHARP INTERNAL AND EXTERNAL EDGES 0.2 RAD OR CHAMFER.			

LAZER
2 PAGES OLD MILL, TAMWORTH RD, HERTFORD, SG13 7DG TEL: 01992 677071
WWW.LAZERLAMPS.COM

PROPRIETARY & CONFIDENTIAL
THE INFORMATION CONTAINED IN THIS DRAWING IS THE SOLE PROPERTY OF LAZER LAMPS LTD. ANY REPRODUCTION IN PART OR AS A WHOLE WITHOUT THE WRITTEN PERMISSION OF LAZER LAMPS LTD IS PROHIBITED

UNLESS STATED OTHERWISE ALL DIMENSIONS IN MM. ALL WEIGHTS IN GRAMMS DO NOT SCALE THIS DRAWING

	NAME	DATE
DRAWN BY	G. BAILEY	23-02-17
CHECKED BY	G. BAILEY	23-02-17
APPROVED BY	G. BAILEY	23-02-17

WEIGHT (g):
THIRD ANGLE PROJECTION
MATERIAL:
FINISH:

PROJECT: CARBON SERIES
DESCRIPTION: CARBON-20
DRAWING NO.
REV 1
SCALE 1:2
SHEET 1 OF 1
SHEET SIZE A0