LAZER

HIGH PERFORMANCE LIGHTING

TRIPLE-R 750 ELITE-3



The ultimate in road-legal auxiliary driving lights from Lazer Lamps, the Triple-R 750 Elite, 3rd Generation, benefits from upgraded LEDs and optics; technology shared within the company's 2018/9 WRC lighting solutions. The result is an unrivalled automotive lighting experience, with no compromises made in regards lighting performance or reliability, and with the light distribution optimised utilising the latest and most sophisticated CAD design and light simulation software.

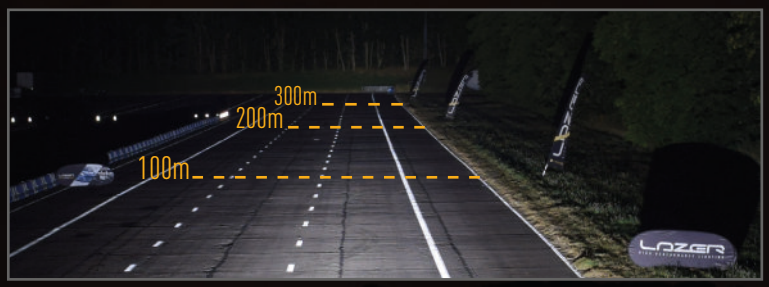

HIGH PERFORMANCE
LED DRIVING LAMPS

1m

5 YEAR WARRANTY

IP67 WATERPROOF

TRIPLE-R

TRIPLE-R 750 ELITE-3





ALSO AVAILABLE IN TITANIUM

- Ultra long-range optics optimised for road and race applications
- High intensity LED's deliver exceptional luminosity and left/right spread
- Component technology shared with 2018/9 WRC lighting solutions
- CAE optimised heatsink
- Electronic thermal management
- 'Unbreakable' polycarbonate lens with hardcoat

TRIPLE-R 750 ELITE3 – BOOST FUNCTION ENGAGED* GENERATED FROM BSI LAMP PHOTOMETRIC TEST DATA: ON ROAD MEASUREMENT DATA

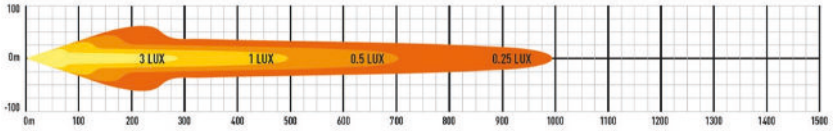

*BOOST FUNCTION IS ENGAGED WHEN THE SUPPLIED 'BOOST CAP' IS FITTED TO THE LAMP, WHEN THE VEHICLE IS OFF-ROAD.

TRIPLE-R 750 ELITE3 – E-MARK COMPLIANT MODE GENERATED FROM BSI LAMP PHOTOMETRIC TEST DATA: ON ROAD MEASUREMENT DATA

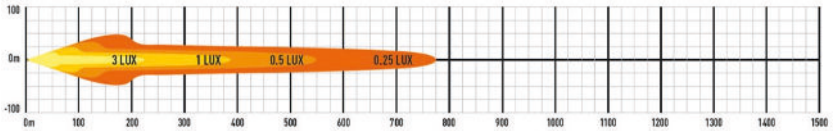

TECHNICAL SPECIFICATIONS

E11 APPROVED HEADLIGHT

IP67 WATERPROOF

5 YEAR WARRANTY

E-MARK REF	37.5
VOLTAGE RANGE	9V - 32V
RAW LUMENS	4,510
BEAM PATTERN	Spot
BEAM DISTANCE (0.25LX)	992m
# HIGH POWER LEDS	4
POWER CONSUMPTION	46 Watts
CURRENT DRAW†	3.2 Amps
LED LIFE	50,000 Hrs*
WEIGHT	780g

* LED Manufacturers Specifications †At 14.4 Volts

MOUNTING OPTIONS:







(Side Bracket kit sold seperately)

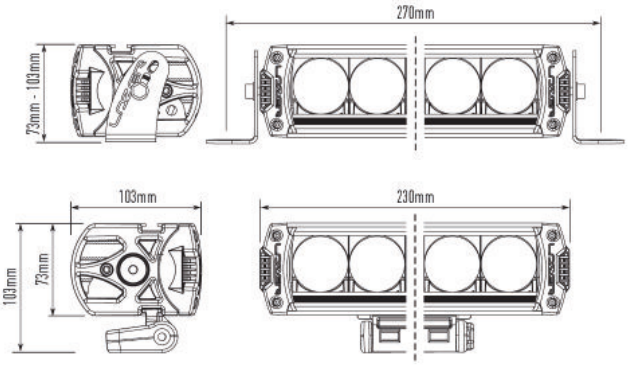

LAZER LAMPS LTD
Units 1+2, Harlow Mill Business Centre, Riverway, Harlow, Essex. CM20 2FD. UK
Tel: +44(0)1992 677374
Email: sales@lazerlamps.com
www.lazerlamps.com

LAZER
HIGH PERFORMANCE LIGHTING







