HIGH PERFORMANCE LIGHTING

TRIPLE-R 16 ELITE-3



Incorporating much of the same component technologies as used in our 2018/9 WRC lighting solutions, the Triple-R 16 Elite, 3rd Generation, is a high-performance auxiliary LED driving light, that doesn't fail to impress. Generating 18,040 raw lumens and 1 lux to nearly 1km, this is a product that delivers astonishing distance illumination, but with a spread of light in the mid to long-range which is guaranteed to make any night-time, or low-level light driving, an altogether safer and more pleasurable experience.

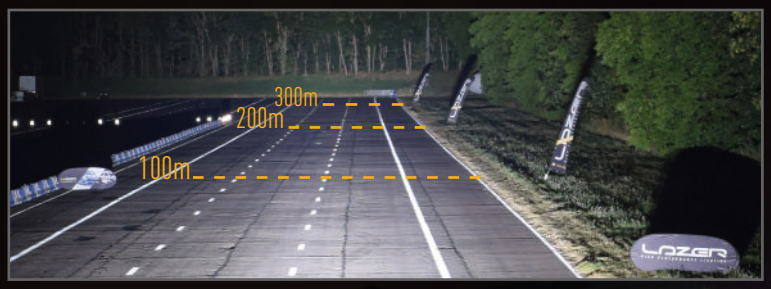

HIGH PERFORMANCE
LED DRIVING LAMPS

TRIPLE-R

TRIPLE-R 16 ELITE-3



- Ultra long-range optics optimised for road and race applications
- High intensity LED's deliver exceptional luminosity and left/right spread
- Component technology shared with 2018/9 WRC lighting solutions
- CAE optimised heatsink
- Electronic thermal management
- 'Unbreakable' polycarbonate lens with hardcoat

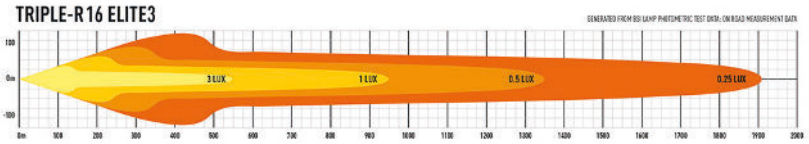

E11 APPROVED HEADLIGHT

IP67 WATERPROOF

5 YEAR WARRANTY

TECHNICAL SPECIFICATIONS

E-MARK REF	N/A
VOLTAGE RANGE	9V - 32V
RAW LUMENS	18,040
BEAM PATTERN	Spot
BEAM DISTANCE (0.25LX)	1910m
# HIGH POWER LEDS	16
POWER CONSUMPTION	184 Watts
CURRENT DRAW†	12.8 Amps
LED LIFE	50,000 Hrs*
WEIGHT	2460g

* LED Manufacturers Specifications †At 14.4 Volts





MOUNTING OPTIONS:



(Side Bracket kit sold seperately)

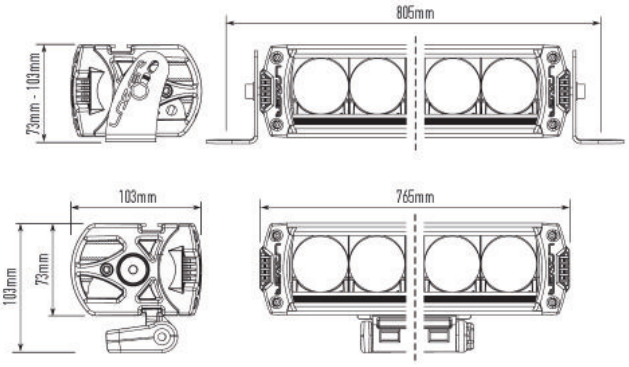

LAZER LAMPS LTD
Units 1+2, Harlow Mill Business Centre, Riverway, Harlow, Essex. CM20 2FD. UK
Tel: +44(0)1992 677374
Email: sales@lazerlamps.com
www.lazerlamps.com

LAZER
HIGH PERFORMANCE LIGHTING







