LAZER

HIGH PERFORMANCE LIGHTING

TRIPLE-R 24



Tuned for a spot beam pattern, while still achieving a decent spread of light in the mid-long range, the Triple-R 24 comprises 24 high power LEDs producing 21,600 lumens at only 270 watts. The light delivers 1 lux at an awe-inspiring distance of 1100m; while at 44˝ in length, the light is the perfect match of maximum illumination with feasible mounting options for many off-road vehicles. Through the use of the Triple-R Reeded Lens system, the beam pattern can be easily tailored to provide additional spread when, or if, required.





ULTRA LONG-RANGE
LED DRIVING LAMPS

TRIPLE-R

TRIPLE-R 24





- Ultra long range optics
- High output LED's from world leader in LED technology
- Dynamic Drive Modulation optimises light output at all times considering thermal conditions of the lamp
- 'Unbreakable' polycarbonate lens
- Supplied with vehicle wiring kit (8216-12V-SW) andboth Side Brackets (1118K) and sliding Centre Mounts (1114K)
- Designed & manufactured in Britain

IP67 WATERPROOF

5 YEAR WARRANTY

TECHNICAL SPECIFICATIONS

E-MARK REF	N/A
VOLTAGE RANGE	9V - 32V
RAW LUMENS	24600
BEAM PATTERN	Spot
OPTICAL EFFICIENCY	92%
BEAM DISTANCE (0.25LX)	2200m
# HIGH POWER LEDS	24
POWER CONSUMPTION	270 Watts
CURRENT DRAW†	18.75 Amps
LED LIFE	50,000 Hrs*
WEIGHT	3420g

* LED Manufacturers Specifications †At 14.4 Volts

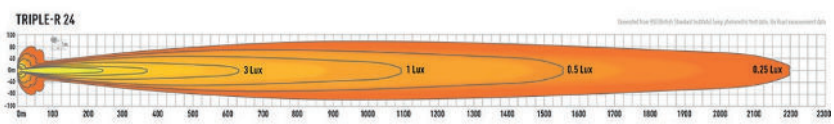



MOUNTING OPTIONS:



(Side Bracket kit sold seperately)

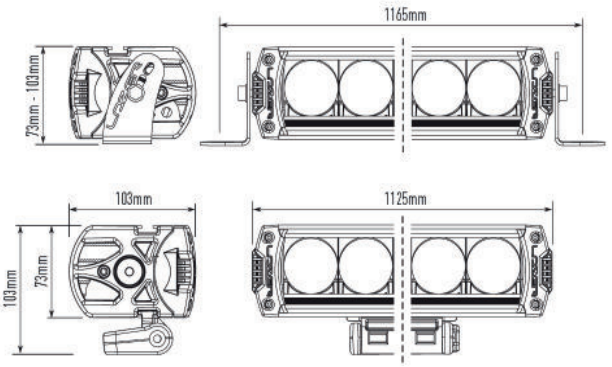

LAZER LAMPS LTD
Units 1+2, Harlow Mill Business Centre, Riverway, Harlow, Essex. CM20 2FD. UK
Tel: +44(0)1992 677374
Email: sales@lazerlamps.com
www.lazerlamps.com

LAZER
HIGH PERFORMANCE LIGHTING




