LAZER

HIGH PERFORMANCE LIGHTING

TRIPLE-R 28



The Triple-R light bar range brings motorsport and world rally performance to the off-road market. At 51", the Triple-R 28 is our biggest and most powerful LED lighting system which when used for night-time and low-light off-road driving and recreation, delivers an unrivalled level of long-range illumination surpassing all others. Tuned for a spot beam pattern, while still achieving a decent spread of light in the mid-long range, the Triple-R 28 comprises 28 high power LEDs producing 28,700 lumens at only 315 watts. The lamp delivers 1 lux at a staggering distance of 1273m.





ULTRA LONG-RANGE
LED DRIVING LAMPS

TRIPLE-R

TRIPLE-R 28





- Ultra long range optics
- High output LED's from world leader in LED technology
- Dynamic Drive Modulation optimises light output at all times considering thermal conditions of the lamp
- 'Unbreakable' polycarbonate lens
- Supplied with vehicle wiring kit (8216-12V-SW) andboth Side Brackets (1118K) and sliding Centre Mounts (1114K)
- Designed & manufactured in Britain

IP67 WATERPROOF

5 YEAR WARRANTY

TECHNICAL SPECIFICATIONS

E-MARK REF	N/A
VOLTAGE RANGE	9V - 32V
RAW LUMENS	28700
BEAM PATTERN	Spot
OPTICAL EFFICIENCY	92%
BEAM DISTANCE (0.25LX)	2546m
# HIGH POWER LEDS	28
POWER CONSUMPTION	315 Watts
CURRENT DRAW†	21.9 Amps
LED LIFE	50,000 Hrs*
WEIGHT	3900g

* LED Manufacturers Specifications †At 14.4 Volts

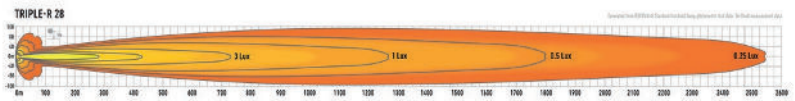



MOUNTING OPTIONS:



(Side Bracket kit sold seperately)

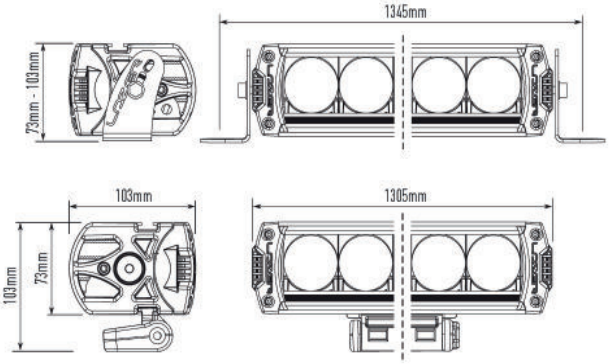

LAZER LAMPS LTD
Units 1+2, Harlow Mill Business Centre, Riverway, Harlow, Essex. CM20 2FD. UK
Tel: +44(0)1992 677374
Email: sales@lazerlamps.com
www.lazerlamps.com

LAZER
HIGH PERFORMANCE LIGHTING







