LAZER

HIGH PERFORMANCE LIGHTING

TRIPLE-R 1250 *PLUS POSITION LIGHT*



Measuring 590mm in length, the Triple-R 1250 'Highline' with Position Light is a fully ECE approved, LED spotlight that delivers both a styling upgrade that is guaranteed to turn heads, and high beam driving light performance that leaves nothing to the imagination. Close to the limit of the road-legal regulations, the light output has been carefully engineered around commercial vehicle applications, whereby a comparatively taller and wider spread of light means that the user benefits fully from an incredible 12,300 lumens while still falling within the allowable road-legal regulations.

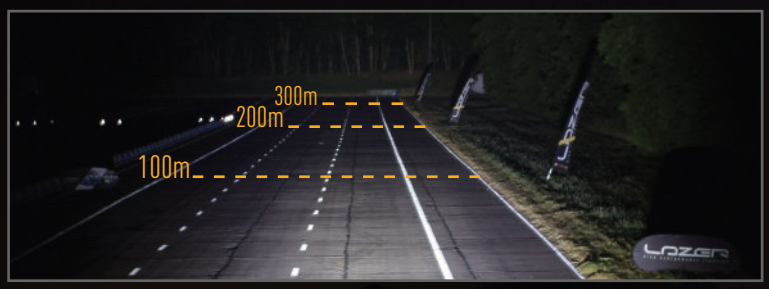

HIGH PERFORMANCE
LED DRIVING LAMPS

E9 APPROVED HEADLIGHT

5 YEAR WARRANTY

IP67 WATERPROOF

TRIPLE-R

TRIPLE-R 1250 WITH POSITION LIGHT



- One of the most powerful road-legal driving lights available
- Ultra long-range optics
- Integrated position lights for added safety and improved styling
- High output LED's from world leader in LED technology
- 5,000 kelvin light temperature for maximum definition
- 'Unbreakable' polycarbonate lens (with lifetime guarantee)
- Made in Britain

TRIPLE-R 1250 HIGHLINE PL
(WITH INTEGRATED POSITION LIGHT)

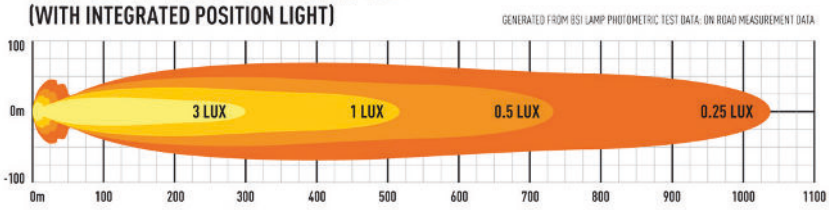

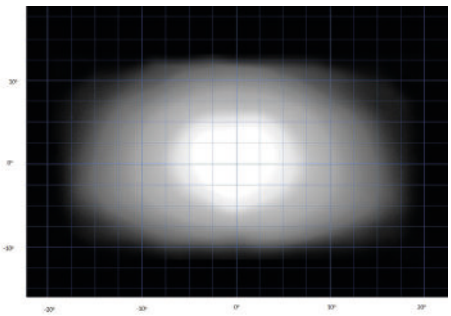

Horizontal: 30°
Vertical: 20°
(2% of peak)

TECHNICAL SPECIFICATIONS

E11 APPROVED HEADLIGHT

IP67 WATERPROOF

5 YEAR WARRANTY

E-MARK REF	37.5
VOLTAGE RANGE	9V - 32V
RAW LUMENS	12,300
BEAM PATTERN	Highline/Wide
BEAM DISTANCE (0.25LX)	1035m
# HIGH POWER LEDS	12
POWER CONSUMPTION	135 Watts
CURRENT DRAW†	9.4 Amps
LED LIFE	50,000 Hrs*
WEIGHT	1940g

* LED Manufacturers Specifications †At 14.4 Volts



MOUNTING OPTIONS:



(Side Bracket kit sold seperately)

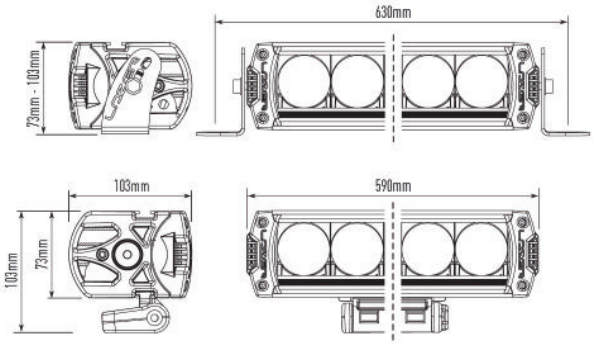

LAZER LAMPS LTD
Units 1+2, Harlow Mill Business Centre, Riverway, Harlow, Essex. CM20 2FD. UK
Tel: +44(0)1992 677374
Email: sales@lazerlamps.com
www.lazerlamps.com

LAZER
HIGH PERFORMANCE LIGHTING




